RS4000 Canron Servo---Part # 40552, 40554, 40555 & 40556 (Pg 1 of 3)

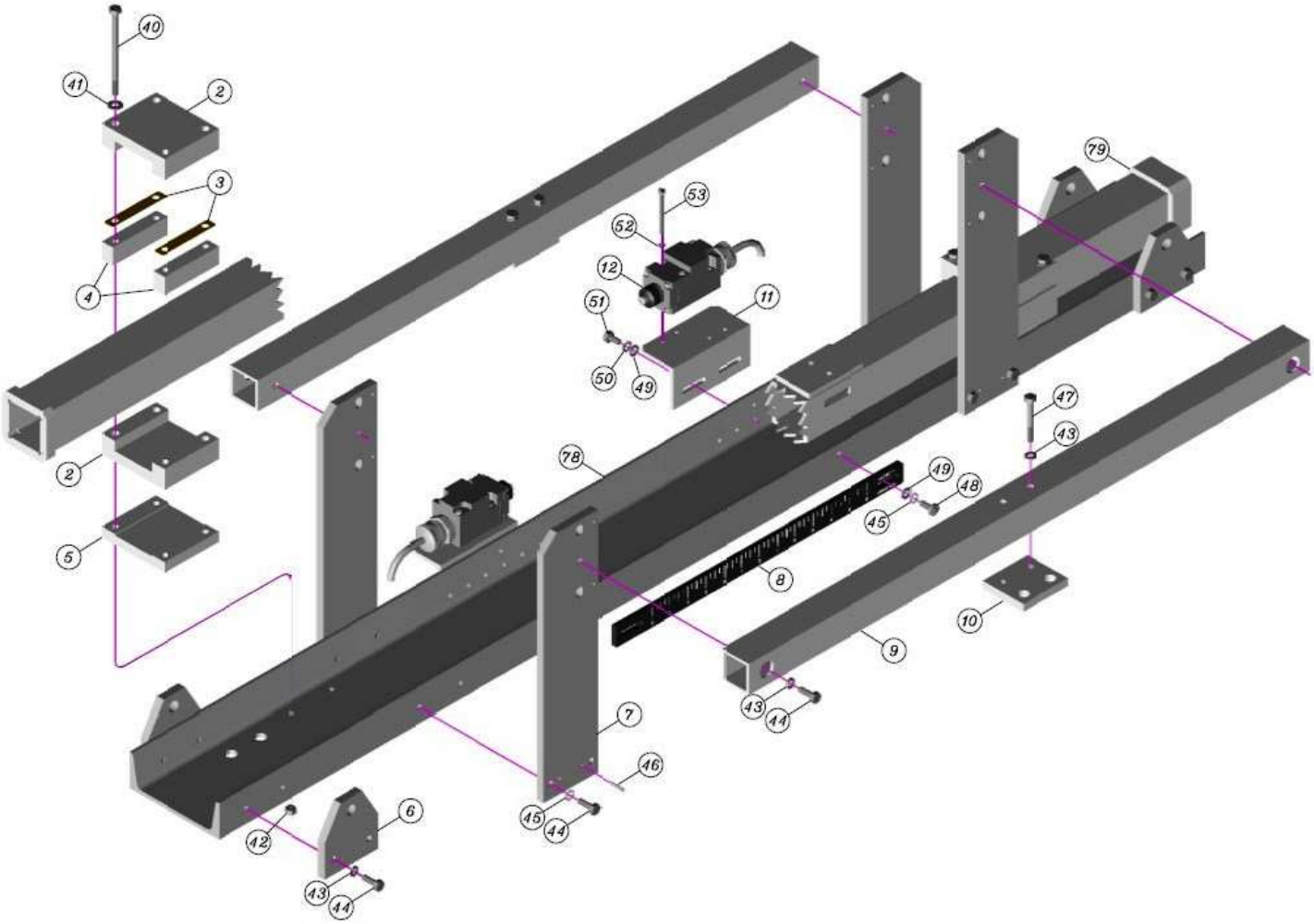

RS4000 Canron Servo--- Part # 40552, 40554, 40555 & 40556 (Pg 2 of 3)

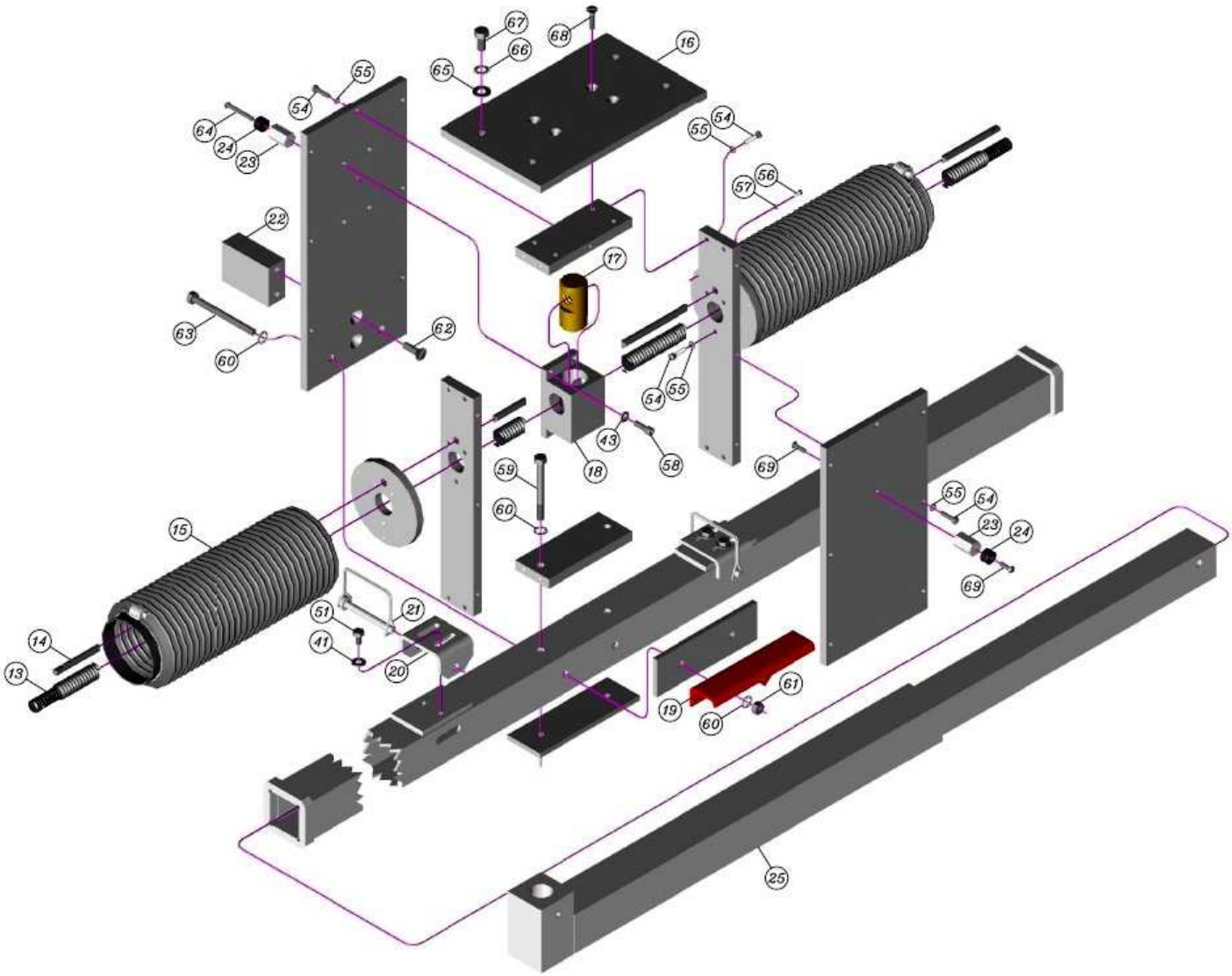

RS4000 Canron Servo--- Part # 40552, 40554, 40555 & 40556 (Pg 3 of 3)

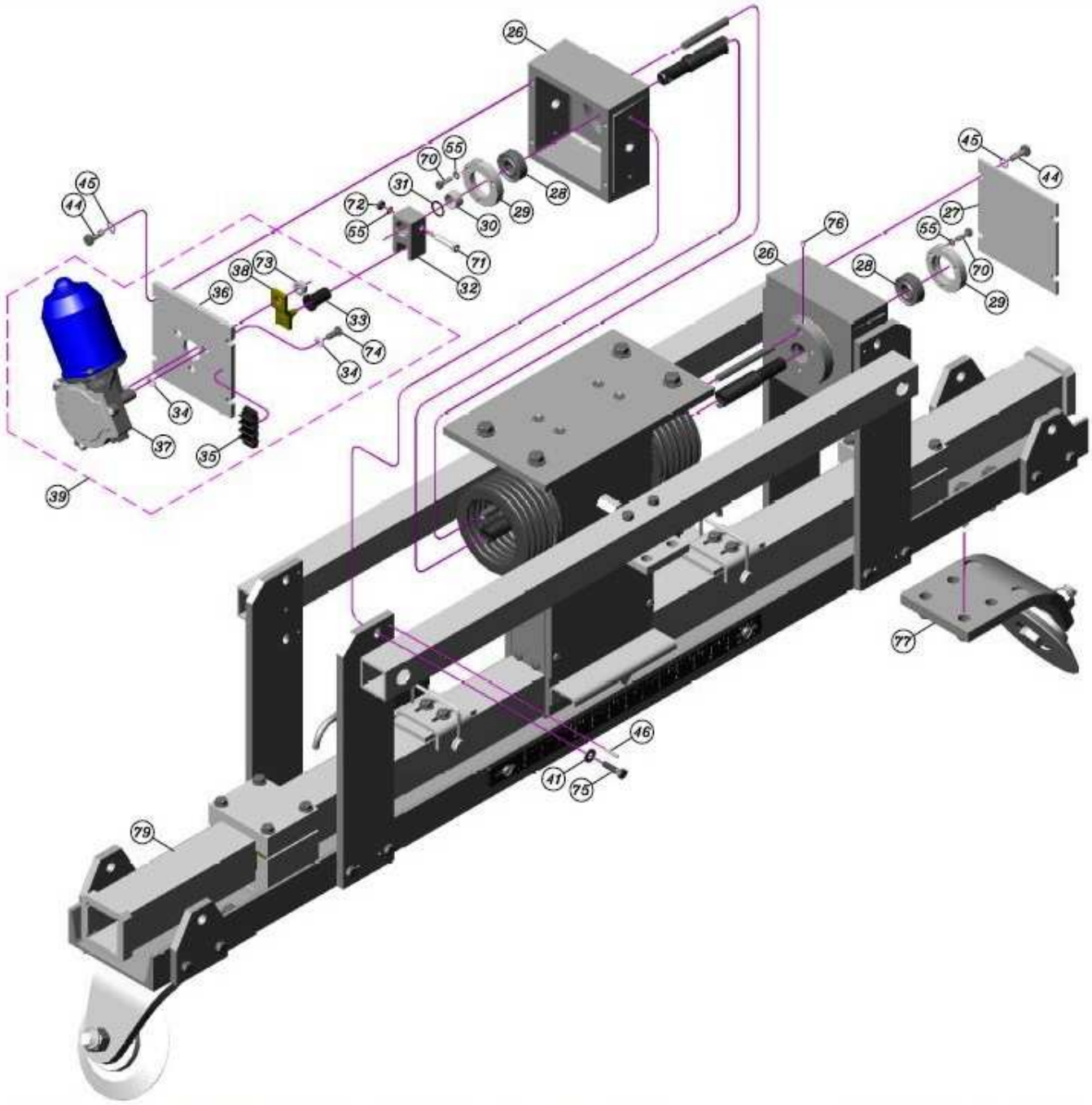

40552, 40554, 40555 & 40556 Parts List (Pg 1 of 2)

Item No.	Part Number	Description
1	40552	Canron Servo Assembly
2	40208	Outer Bearing
3	40212	Shim
4	40204	Bearing Spacer
5	40206	Bearing Block
6	40243	Mounting Bracket
7	40233	Drive Support Plate
8	40084	Standard/Metric Scale
9	40234	Guide Rail
10	40242	Anchor Plate
11	40200	Limit Switch Mounting Bracket
12	40072	Limit Switch
13	40173	Jack Screw*
14	40213	Support Rod
15	40077	Bellows/Flexible Shield w/ Clamps (SET)
16	40191	Sensor Plate
17	40172	Brass Nut*
18	40203	Nut Guide
19	40199	Pointer Bracket
20	40247	Stop Block
21	40309	Hitch Pin
22	40239	Trip Block
23	40235	Standoff
24	40249	Plug
25	40248	Extension Arm
26	40043	5X5 Cast Housing
27	40197	Cover Plate
28	40078	Jack Screw Bearing
29	40209	Bearing Retainer
30	40205	Bearing Spacer
31	40271	Non-Metallic Washer/Shim
32	40227	Crank Shaft
33	40226	Sleeve
34	40225	Non-Metallic Shoulder Washer
35	40085	Terminal Block
36	40214	Motor Mounting Plate
37	40075	24VDC Servo Motor
38	40076	Motor Arm
39	40281	Servo Motor Assembly w/ Sleeve
40	Ref Only	1/4-20 x 4” Hex Head Screw
41	Ref Only	1/4" Flat Washer

40552, 40554, 40555 & 40556 Parts List (Pg 2 of 2)

Item No.	Part Number	Description
42	Ref Only	1/4-20 Hex Nut
43	Ref Only	1/4" Split Ring Lock Washer
44	Ref Only	1/4-20 x 3/4" Hex Head Screw
45	Ref Only	1/4" Internal Tooth Lock Washer
46	Ref Only	1/8” x 3/4" Spring Pin
47	Ref Only	1/4-20 x 2” Hex Head Screw
48	Ref Only	1/4-20 x 5/8” Pan Head Slot Screw
49	Ref Only	1/4" Flat Washer
50	Ref Only	1/4" External Tooth Lock Washer
51	Ref Only	1/4-20 x 1/2" Hex Head Screw
52	Ref Only	#10 External Tooth Lock Washer
53	Ref Only	10-24 x 2” Pan Head Slot Screw
54	Ref Only	10-24 x 3/4" Pan Head Slot Screw
55	Ref Only	#10 Split Ring Lock Washer
56	Ref Only	6-32 x 3/8” Pan Head Slot Screw
57	Ref Only	#6 Split Ring Lock Washer
58	Ref Only	1/4-20 x 3/4" Socket Head Screw
59	Ref Only	5/16-18 x 3” Hex Head Screw
60	Ref Only	5/16” Internal Tooth Lock Washer
61	Ref Only	5/16-18 Hex Nut
62	Ref Only	5/16-18 Flat Head Screw
63	Ref Only	5/16-18 x 3 1/2" Hex Head Screw
64	Ref Only	10-32 x 1 1/2" Round Head Screw
65	Ref Only	3/8” Flat Washer
66	Ref Only	3/8” External Tooth Lock Washer
67	Ref Only	3/8-16 x 3/4" Hex Head Screw
68	Ref Only	1/4-20 x 1” Flat Head Screw
69	Ref Only	10-32 x 5/8” Round Head Screw
70	Ref Only	10-32 x 5/8” Hex Head Screw
71	Ref Only	10-24 Thd, 1” Long x 1/4" Dia. Shoulder Bolt
72	Ref Only	10-24 Hex Nut
73	Ref Only	8mm-1.25 Serrated Flange Nut
74	Ref Only	1/4-20 x 5/8” Button Head Screw
75	Ref Only	1/4-20 x 1” Hex Head Screw
76	Ref Only	10-32 x 3/16” Cup Point Set Screw
77	40297	Beveled Wheel Assembly
Not Pictured	40318	Beveled Wheel Assembly (42” Spec)
78	40241	Support Channel (39”, 42” & 56.5”)
79	40246	Slide Bar

***Updated Part-These parts must be replaced as a set in Yellow assemblies.**

RS4000 Canron Guide Wheel Assembly---Part # 40297 & 40318

40297---56.5” Beveled Wheel Assembly
40318---42” Beveled Wheel Assembly

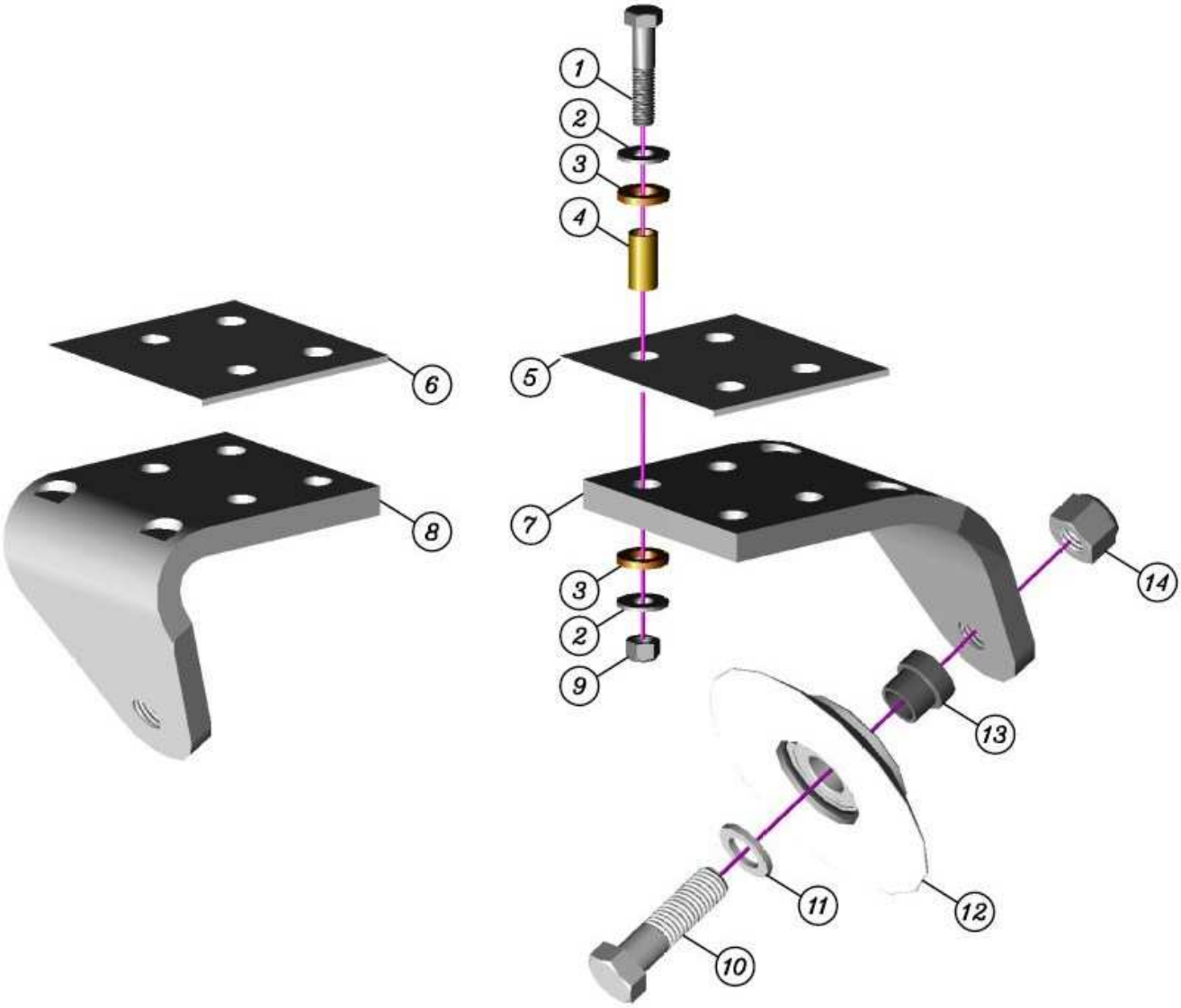

40297 & 40318 Parts List

Item No.	Part Number	Description
1	Ref Only	3/8-16 x 1-3/4 Hex Head Bolt
2	Ref Only	5/16 Flat Washer
3	40306	Phenolic Isolator, Washer
4	40305	Phenolic Isolator, Cylinder
5	40304	UHMW Isolator Pad
6	40317	UHMW Isolator Pad (42” Spec)
7	40303	Wheel Mounting Bracket
8	40316	Wheel Mounting Bracket (42” Spec)
9	Ref Only	3/8-16 Nylon Lock Nut
10	Ref Only	5/8-11 x 2-1/4 Hex Head Bolt
11	40301	Wheel Washer
12	40307	Beveled Wheel w/ Bearing
13	40302	Wheel Bushing
14	Ref Only	5/8-11 Nylon Lock Nut